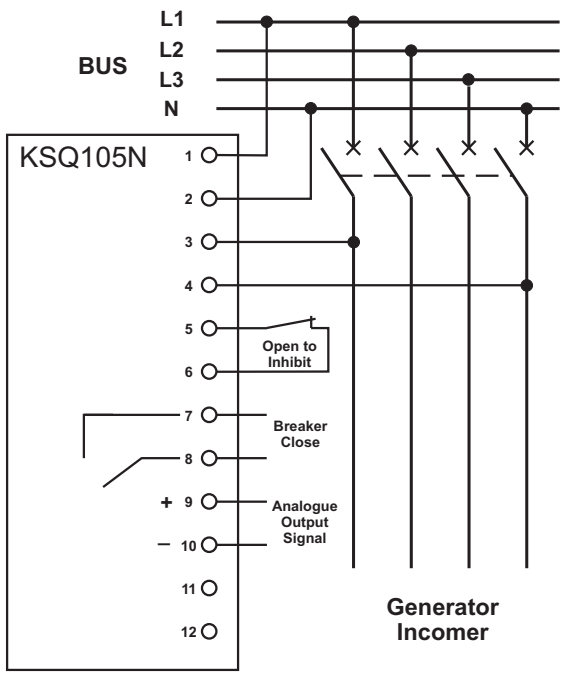

KSQ105N Terminal	KSQ104F2 Terminal
1	1
2	2
3	3
4	4
5	N/A
6	N/A
7	11
8	12
9	22
10	21
11	
12	

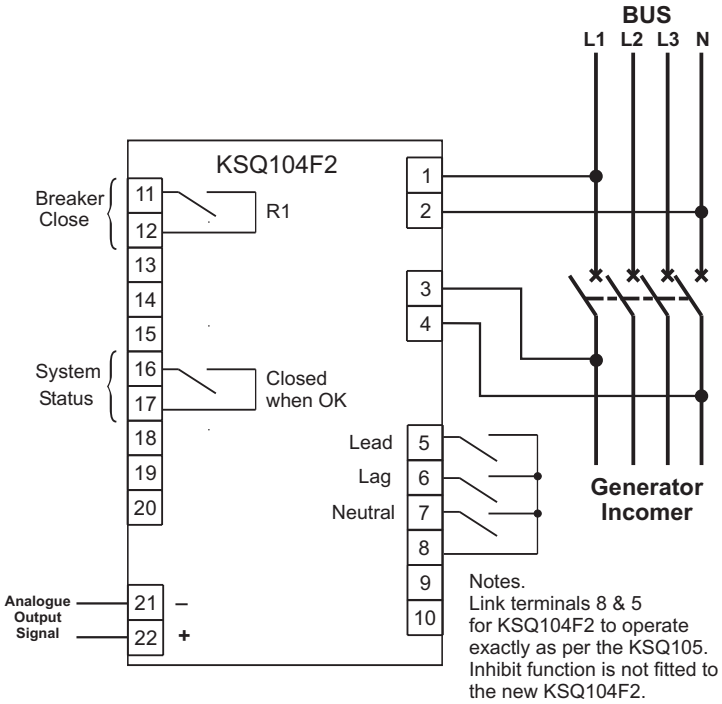

Notes.
Link terminals 8 & 5 for KSQ104F2 to operate exactly as per the KSQ105. Inhibit function is not fitted to the new KSQ104F2.

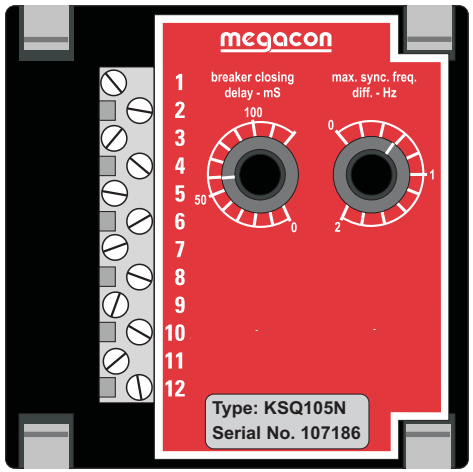

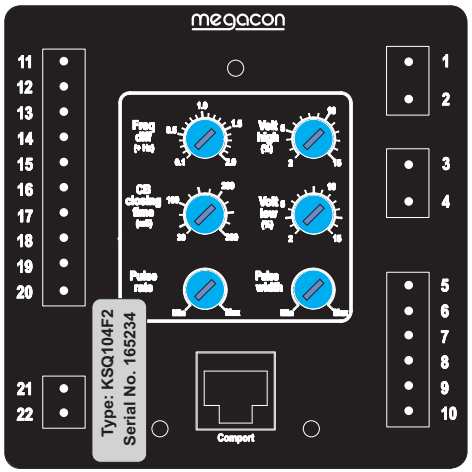

Megacon International - Norway - UK - Denmark

www.megacon.com

Terminal connection changes:
KSQ105 & KSQ105N with single part connectors to KSQ104F2.

MTD KSQ105 T2-C

Drawn: MJB

Checked: